RV TECHNICIAN

PUBLISHED BY THE RVDA EDUCATION FOUNDATION'S

The Mike Molino RV Learning Center — Developing Top Performers

Jan/Feb 2015

Troubleshooting Furnaces

Page 5

Updated Flat Rate Manual

Page 12

Recognition: Regina Kerr

Page 10

New Drop-In Hitch for Dodge Ram

Page 17

RV TECHNICIAN

PUBLISHED BY THE RVDA EDUCATION FOUNDATION'S The Mike Molino RV Learning Center Developing Top Performers

Jan/Feb 2015

Furnaces

5 Troubleshooting Furnace Components

Safety

9 The Facts About Jacks

Recognition

10 Certified Warranty Administrator Regina Kerr also has Technician Training

Resources

12 New Service Management Guide has More Labor Times

Electrical

13 Proper Grounding of Portable Electric Equipment

DEPARTMENTS

4 Board of Directors
17 New Products
19 Recalls
26 Contributors

Certification
Page 21

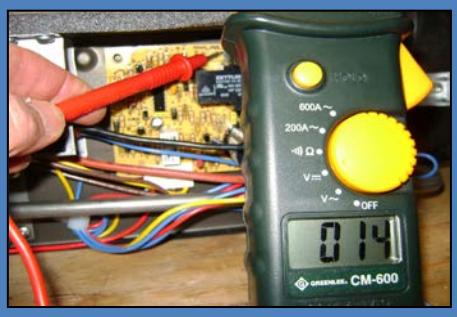

5 Furnaces

10 Recognition

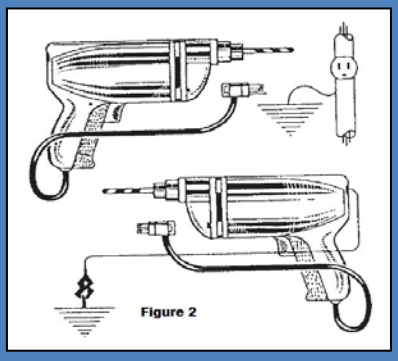

13 Electrical

12 Resources

Furnaces, Safety, and a New Service Management Guide

First up in this edition is an article about furnace troubleshooting. It details the various components that need to be checked when the furnace isn't working, starting with testing for proper voltage, checking thermostat functionality, removing debris (such as dead bugs and animal nests) from the blower motor and wheel, and on through the rest of the furnace's key components.

There are also two safety related stories. One discusses the proper care and maintenance of jacks and how often to inspect them, and the other explains how to ground portable electric tools and equipment to avoid potentially fatal shocks.

If you haven't heard by now, there's a new, updated edition of the *Service Management Guide* available from the RV Learning Center. More than a dozen industry experts—including certified master technicians—spent a year revising, rewriting, and adding new material to this popular flat rate manual. It now includes more than 100 pages of labor times for the repairs that technicians perform most often. The guide is available in printed manual and CD-ROM formats. Read more about it on page 12.

Mary Anne Shreve
Editor
mashreve@rvda.org
(703) 591-7130 x117

RV Technician Advisory Group

Randy Biles, Pikes Peak Traveland Inc.
Tom Fribley, Fribley Technical Services Inc.
Ellen Kietzmann, Blue Ox
Gary Motley, Motley RV Repair
Steve Savage, Mobility RV Service
Tony Yerman, RVDA Service Consultant

THE MIKE MOLINO RV LEARNING CENTER BOARD OF DIRECTORS

Chairman
Jeff Pastore
Hartville RV Center Inc.
Hartville, OH
(330) 877-3500
jeff@hartvillerv.com

Vice Chairman
Dan Pearson
PleasureLand RV Center Inc.
St. Cloud, MN
(320) 251-7588
D.Pearson@pleasurelandrv.com

Secretary/Treasurer
Bill Koster
Protective
St. Louis, MO
(636) 536-5704
bill.koster@protective.com

President
Phil Ingrassia, CAE
RVDA
Fairfax, VA
(703) 591-7130
pingrassia@rvda.org

Director
Mick Ferkey
Greeneway Inc. (Route 66 Dealer)
Wisconsin Rapids, WI
(715) 325-5170
mickferkey@greenewayrv.com

Director
Darrel Friesen
All Seasons RV Center
Yuba City, CA
(530) 671-9070
Darrel@allseasonsrvcenter.com

Director
Eleonore Hamm
RVDA of Canada
Richmond, BC
(604) 204-0559
eleonore_hamm@rvda.ca

Director
Jeff Hirsch
Campers Inn of Kingston
Kingston, NH
(603) 642-5555
jhirsch@campersinn.com

Director
Rick Horsey
Parkview RV Center
Smyrna, DE
(302) 653-6619
rhorsey@parkviewrv.com

Director
Newt Kindlund
Kindlund Investments
Winter Park, FL
(407) 628-4211
newt@kindlund.com

Director
John McCluskey
Florida Outdoors RV Center
Stuart, FL
(772) 288-2221
john@floridaoutdoorsrv.com

Director
Matthew Miller
Newmar Corporation
Nappanee, IN
(574) 773-2381
Mlmiller@newmarcorp.com

Director
Russ Patton
Byerly RV Center
295 East 5th St.
Eureka, MO
(636) 938-2000
rpatton@byerlyrv.com

Director
Steve Plemmons
Bill Plemmons RV World
Rural Hall, NC
(336) 377-2213
steve@billplemmonsrv.com

Director
Mike Regan
Crestview RV Center
Buda, TX
(512) 282-3516
mike_regan@crestviewrv.com

Director
Tom Stinnett
Tom Stinnett RV Freedom Center
Clarksville, IN
(812) 282-7718
tstinnett@stinnettrv.com

Director
Tim Wegge
Burlington RV Superstore
Sturtevant, WI
(262) 321-2500
twegge@burlingtonrv.com

Director
Brian Wilkins
Wilkins R.V. Inc.
Bath, NY
(607) 776-3103
bwilkins@wilkinsrv.com

The Mike Molino RV Learning Center Staff

Phil Ingrassia, CAE
RVDA Education Foundation President

Ronnie Hepp, CAE
Vice President for Administration

Karin Van Duyse
Chief, RV Learning Center

Mary Anne Shreve
Editor

Chuck Boyd
Dealer Services Manager

Liz Fleming
Education Coordinator

Hank Fortune
Director of Finance

Jeff Kurowski
Director of Industry Relations

Isabel McGrath
Technician Certification Registrar

Julie Anna Newhouse
Marketing Manager

Brett Richardson, Esq., CAE
Director of Legal & Regulatory Affairs

Julianne Ryder
Marketing Communications Specialist

Terri Whiteside
Accounting Clerk

Tony Yerman
RV Service Consultant

Troubleshooting Furnace Components

By Gregory Wischmeyer

An owner expects heat to automatically come blowing out when his RV's thermostat is turned on, but it doesn't always turn out that way! This article covers key furnace component requirements and, while it can't cover all furnace models and possible faults, will help the newer technician understand individual components' relationships within the furnace system.

Power, in RVing terms, is the available voltage and amperage to operate the electrical systems. One of the demands on the RV's electrical system is the furnace.

Voltage at fuse

Without backing up the electrical system past the 12 volt circuit breaker, voltage needs to be between 10.5 VDC and 13.5 VDC. Improper voltage can cause ignition problems as well as blower speeds that are too fast or too slow.

Next, the thermostat needs to be checked out. Many thermostats last for years, but others do not. Thermostats need to have voltage in and voltage out verified.

Voltage at thermostat

Some thermostats also send power to the AC unit. The contact points and heat anticipator strip may need to be cleaned. I once removed from between a set of air conditioning relay points a dead lady bug that had shut down the AC on a 105-degree day. Many thermostats draw 1.0

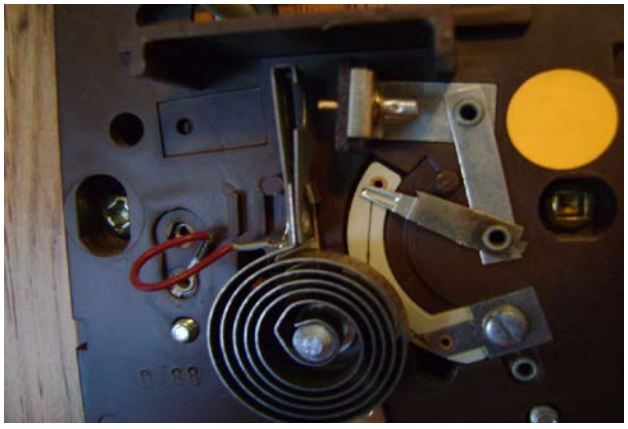

Thermostat contact points and heat anticipator

(continued on next page)

amp, and this can be checked with a VOM.

If all systems are go up to this point, it's time to check the time delay relay (TDR). The TDR should have constant voltage to the positive (+) terminal and a good ground from the negative (-) terminal. The TDR needs to receive signal voltage from the thermostat to operate as the relay it is.

A TDR is normally an open relay and needs to close when activated. If the TDR doesn't close, no VDC will be present at the motor or blower terminal. Additionally, the TDR will remain closed for 45 to 90 seconds after the 12 VDC from the thermostat ceases. This allows the blower to cool the combustion chamber. (14 volts on VOM shown is coming from separate converter used on my bench testing.)

VDC into circuit board and TDR

The blower is the furnace's lungs. The furnace blower motor is dual purpose--one side draws combustion air in, while the other side provides circulation. Ensure proper voltage to the blower and ensure a good ground. Checking the blower will indicate if the motor itself is in good condition.

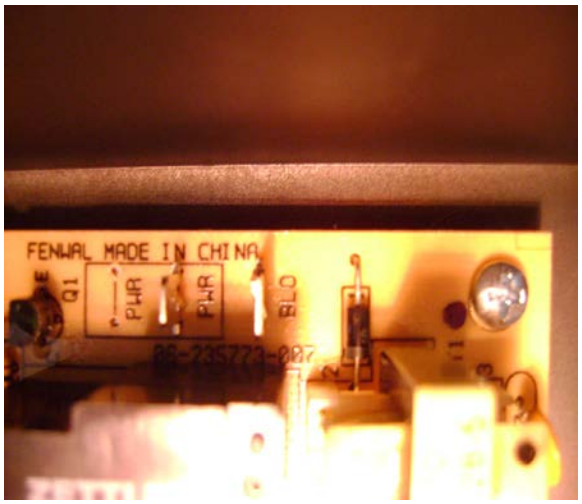

Blower motor VDC terminal

There may be restrictions on the rotation of the motor shaft, such as dirt, lint, hair, nests, or restrictions on the blower wheels.

Mouse nest restricting blower wheel

Safety components include limit switches and sail switches. Limit switches are normally closed and heat-activated to shut down the gas flow. The limit switch ***should not*** be checked by using a heat source like a barbecue lighter. Too much heat can change the value of the limit switch.

(continued on next page)

Check it with the VOM, and if it shows continuity, then it's good.

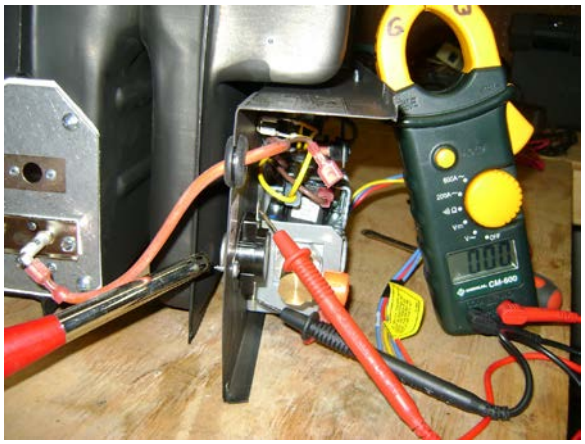

Limit switch with VOM showing continuity

The sail switch ensures that there's proper air flow from the blower before "closing" and sending 12VDC for ignition. Sail switches can malfunction because of blocked return air grills, blocked or restricted ducts and registers, dirt on the sail switch paddle that weighs it down, and/or a bent paddle.

"Closed" sail switch showing continuity

Fan control circuit boards or ignition circuit boards often can be checked by module board field testers that facilitate trouble shooting of the "boards." Most larger shops have these units.

RV furnaces also need fuel. The electrical system controls the propane entering the system through the fuel solenoid. Dual solenoid valves have been used on models since 1985. These are also called redundant valves. The dual valve gives extra protection against propane leaking past the valve seals.

Of particular importance on the dual valves are the positive (+) and negative (-) connections. The fuel solenoids should draw about 30-50 ohms through their coils.

Gas solenoid showing 42 Ohms

At the electrode, electricity meets fuel. The electrode needs to be checked for a cracked ceramic insulator. This could allow a short. The electrode will also have a remote or built-in

(continued on next page)

flame sensor sending a milliamp signal to keep the furnace running.

Electrode gap

Electrode insulator

None of the above trouble shooting steps will help if there isn't enough propane at the proper pressure. If you suspect inadequate propane, perform a low-pressure check. Also, adequate pressure may exist but the supply may be diminished due to a defective propane regulator or restricted propane piping.

Check copper tubing, rubber LP hose, and black pipe. Is there a blockage in the furnace fuel orifice?

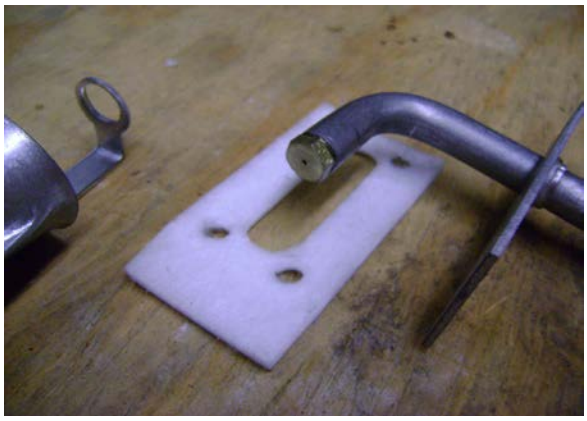

Fuel burner assembly with orifice

Pressure drop test

Propane pressure test

I hope this article helps newer techs break down furnace components for troubleshooting.

Gregory Wischmeyer is an RVIA codes and standards inspector and a certified RV service technician.

The Facts about Jacks

Compiled from the Occupational Safety and Health Administration (OSHA)

A jack is one of the easiest pieces of equipment to operate. But every year, many technicians are seriously injured because they didn't use it correctly. To avoid accidents in your dealership, enforce these simple rules.

Proper use of jacks

- Always use a jack with a rated capacity that equals or exceeds the load you're lifting. ***The rated load should be legible and permanently marked in a prominent location on the jack by casting, stamping, or other suitable methods.***
- Always set the jack on a firm and level foundation.
- Make sure you don't exceed the load limit of the floor when working on a floor of any kind.
- The jack needs to be perpendicular--at a right angle--to the load.
- Have enough help when you install or move a jack.
- Provide employees with proper training on how to use jacks.

Care and maintenance

- Keep jacks clean and accessible.
- Lubricate jacks at regular intervals but only the specified locations.
- Examine and test jacks for defects monthly. ***Defective jacks need to be removed from use immediately, tagged as out of service, and not used until repaired.***
- Check repaired or replacement parts for defects.
- Provide employees with proper training on how to care for, examine, and test jacks.

Accidents caused by improper use, care, and maintenance of jacks can be easily avoided by following the above rules. For more information about proper use and care of jacks, visit the Occupation Safety and Health Administration website at www.osha.gov.

How Often to Inspect?

* For jacks under constant or intermittent use at one location: Once every six months

* For jacks sent out of the shop: Before and after the job

* For jacks subjected to abnormal load or shock: Immediately before and immediately after

The Society of Certified RV Professionals recently honored five individuals who have maintained their professional certifications for eight years or more. The five received certificates and congratulations from RVDA leaders before a standing-room-only audience at the society's reception during the RVDA convention. This is the second in a series of profiles that celebrates these individuals and explores their reasons--and rewards--for remaining certified.

Regina Kerr: Certification is "Good for Your Dealership and Good for You"

By Tony Yerman

Regina Kerr has been a certified warranty administrator since 2007 and has worked at Tennessee RV Sales and Service for the past 10 years. Being honored by the society last November for achieving and maintaining her certification "meant the world" to her, she says.

"The warranty administrator takes a lot of flak," says Kerr, not only from others in the dealership but also from the manufacturers.

Kerr had originally worked in parts stores, then as a parts runner at Tennessee RV Sales and Service. Eventually, she took the warranty administrator position there. Only a few weeks later, the dealership received a fax about the RV Learning Center's pilot certification program for warranty administrators. It was the first certification opportunity she'd heard of for anyone other than technicians, and she decided to go for it. "I wanted to be the best I could be," she says.

Kerr says that certification makes a real difference in her ability to do her job, and it also makes a big difference to her customers. "I don't get to talk with a lot of the customers, but when I do, they're comforted by the fact that I have the knowledge to do the best for them," she says.

(continued on next page)

And people do notice her certificate and patch--which her husband mounted on a plaque-- hanging above her desk. “They ask me, ‘You need to be certified to do this?’ ”

Her certification and skills have also been noticed by others in the dealership. She says an employee in Tennessee RV's in-house retail store once told her that he "wanted to know what she knew” and what she’d done to learn her job so well, because he wanted to do the same. She told him that, in addition to getting certified as a warranty administrator, she had also taken the RVIA technician certification prep course—and now he’s taking it, too.

Kerr wasn’t seeking to gain certification as a tech but rather, a better understanding of her own job. “I found the training to be very helpful for knowing what was on technicians’ repair orders and what had to be explained to the manufacturers for the warranty claims,” she says.

As a result of her experience in both the parts and warranty departments, she’s gained a reputation as the answer woman at her dealership. “Certification is good for your dealership, and it’s good for you,” she says.

Kerr knows the value of ongoing professional education and wishes there

were more software courses that she could use for recertification CEUs. “Training on software like Excel or Word would be very helpful, and we use IDS as our dealer management software, so continued training on it would be very valuable,” she says. “Most manufacturers do their warranty claims on-line now, and more manufacturer training would be a great help.”

Kerr thinks the new Society of Certified RV Professionals has already had a positive effect on the industry. After the society’s reception at the RVDA convention, she was told that her dealership was going to publish a press release. “I think the society is a very good idea,” she says. “It’s really nice to be recognized, and it’s a real honor.”

Tony Yerman is RVDA’s RV service consultant and a master certified technician.

New 11th Edition *Service Management Guide* Has More Labor Times

The Service Management Guide has more than 100 pages of labor times for the functions that technicians perform most frequently.

More than a dozen RV repair experts spent a year updating and rewriting the popular *Service Management Guide*. The all-new 11th edition has more than 100 pages of average work times for the functions technicians perform most frequently. The guide includes extensive updates to previous editions and features additional material provided by dealers, service managers, technicians, and suppliers.

"The new guide has more service management guidance, from training opportunities to job descriptions to tool lists, plus how to manage situations the service department deals with on a daily basis," says RV Learning Center service consultant Tony Yerman, who led the *Service Management Guide* review task force.

"Every labor operation listed now has a labor time associated with it. If a time might have a variance or be questionable as to accuracy for the application, the publication provides guidance on how to handle the situation."

The guide is an ideal tool for the service department when working with extended service agreement and insurance companies. It's available in two formats-- a 3-ring binder printed on durable cardstock and a CD-ROM with searchable PDF documents.

Special pricing is available for RVDA members.

To view the table of contents, see a sample work unit, and order copies, visit www.rvlearningcenter.com.

Proper Grounding of Portable Electric Equipment

From Sentry

Shocks from portable electric tools and equipment can cause serious electrical burns. Even minor shocks can cause falls that result in serious injury or death.

Grounding portable electric tools helps safeguard the operator. The current from any defect or short inside the tool will be conducted from the metal frame through the ground wire instead of through the operator's body.

Most electric tools have a ground wire built into the cord. This wire is connected to the tool housing at one end and to a power plug at the other end. This third wire may terminate through a three-way plug, a ground jack, or an alligator clip. The three-way or three-prong plug (Figure 1) provides the more positive safeguard because it eliminates the possibility of the operator forgetting to attach the ground wire. If other systems are used that require a separate manual attachment of the ground wire, instruct the operator on the importance of the third wire and how to make the connection.

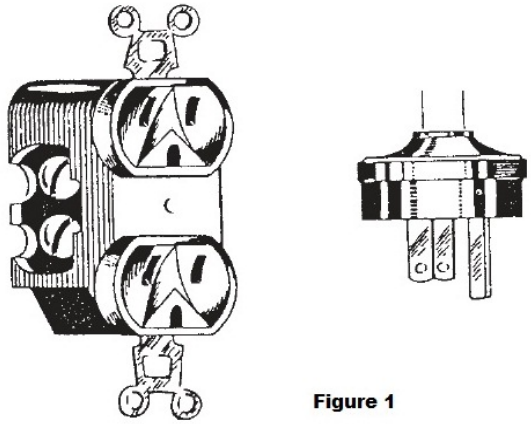

Figure 1

Most electrical tools are easily adaptable to a three-wire cord or a separate ground wire. A ground wire can easily be installed by attaching an end of a flexible wire to the metal tool housing or frame and the other end to a ground by means of a battery clip or permanent clamp (Figure 2).

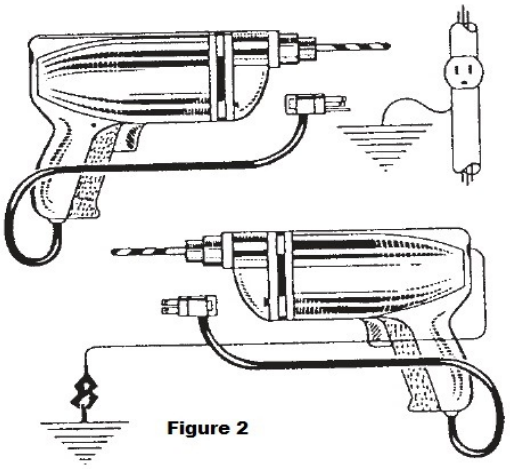

Figure 2

The ground wire can then be taped to the electric cord. It should be at least 1½ inches longer than the power cord so when the power is disconnected the power prongs will disconnect before the ground.

Grounding Electrodes

Metal-enclosed wiring, including conduit and metallic BX cable, is normally grounded to the electrical system. However, with knob and tube or nonmetallic cable such as "romex," a ground conductor must be provided from the grounding terminal of the receptacle to the common ground at the service entrance.

(continued on next page)

Power Extension Cords

Use the right extension cord. All portable power extension cords should contain a suitable ground extension with the male and female attachment of the plugs. The extension should have a suitable wire size for the overall length and tool amperage rating in order to prevent a serious voltage drop, power loss, and possible motor damage. Heavier gage wire is required as the cord's length increases. The following is a guide for proper wire size.

RECOMMENDED WIRE GAGE SIZE FOR POWER EXTENSION CORDS

Extension Cord Length	Amperage Rating of Tool					
	0 - 2.0	2.1 - 3.4	3.5 - 5.0	5.1 - 7.0	7.1 - 12.0	12.1 - 16
025 ft.	18	18	18	18	16	14
050 ft.	18	18	18	16	14	12
075 ft.	18	18	16	14	12	10
100 ft.	18	16	14	12	10	8
150 ft.	16	14	12	10	8	8
200 ft.	16	14	12	10	8	6
300 ft.	14	12	10	8	6	4
400 ft.	12	10	8	6	4	4
500 ft.	12	10	8	6	4	2
600 ft.	10	8	6	4	2	2
800 ft.	10	8	6	4	2	1
	0 - 1/3	1/3 - 1/2	1/2 - 3/4	3/4 - 1	1 - 1 3/4	1 3/4 +
	Horsepower Rating of Tool*					

*If tool's horsepower rating falls between two categories, use the lower gage wire.
NOTE: Shaded area indicates flexible wire cord lengths that are typically not available.

Safety Basics

* Using portable tools in hazardous locations requires special care regarding proper grounding. Good, tight ground connections are needed to eliminate any arcing or sparking in the tool or at the ground connection.

* Operating portable electric equipment or tools in wet areas demands well-grounded connections. Additional safeguards including rubber mats and rubber gloves should be used in these situations.

* When purchasing new equipment, only items listed by Underwriters' Laboratories, Inc. should be considered.

* Where industrial codes or local regulations differ, National Electric Codes will apply.

(continued on next page)

Three Incorrect Methods of Wiring

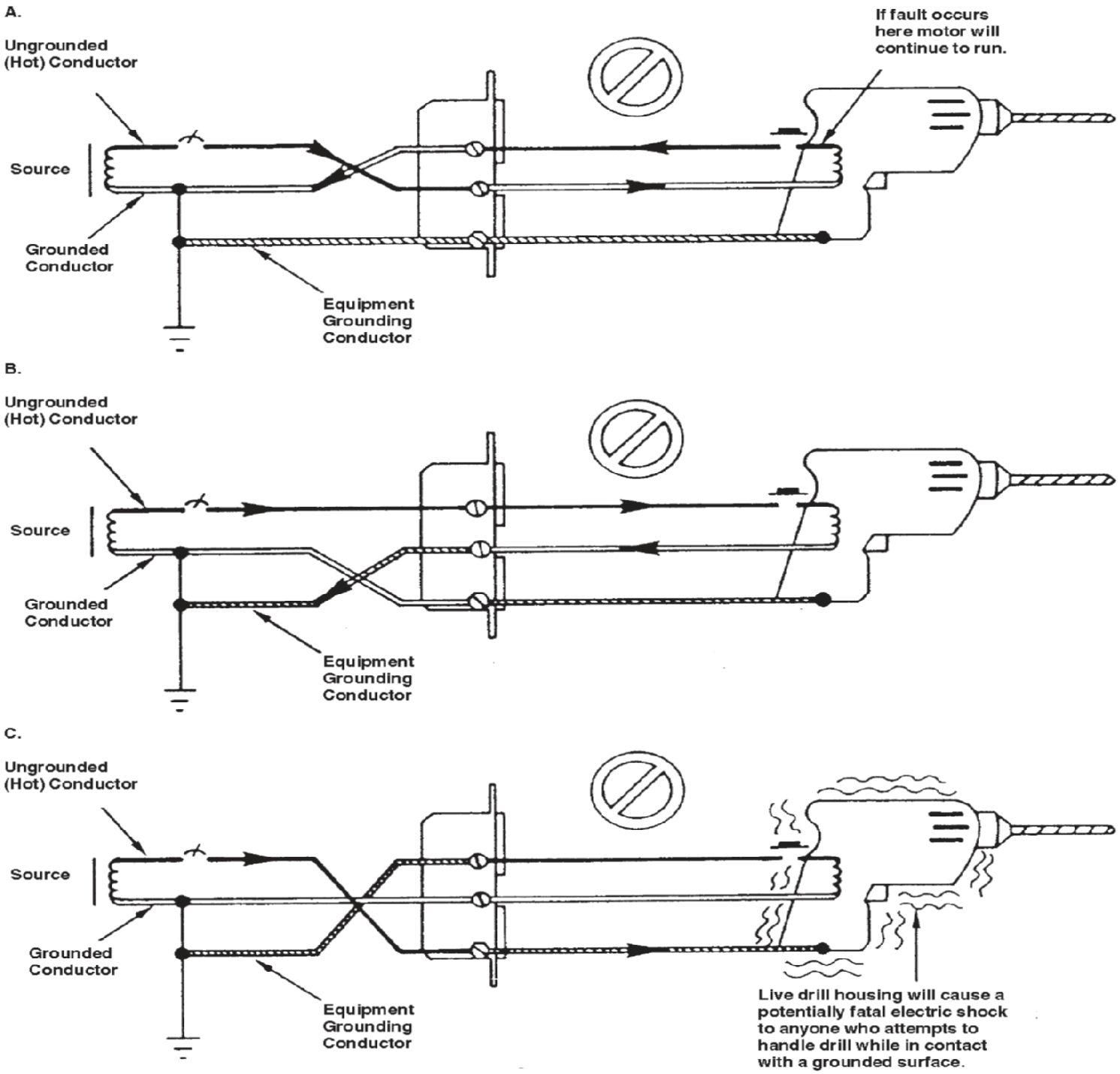

A Reversed polarity. The ungrounded (hot) and grounded conductors are reversed. When the drill switch is off, most of the circuit inside the drill remains energized.

B Grounded and neutral reversed. The current now travels through the equipment grounding conductor. Someone in contact with the grounding conductor and a good ground could receive a dangerous shock.

C Ungrounded (hot) conductor and ground reversed. The drill case is continuously energized in this condition.

(continued on next page)

HUMAN REACTION TO ELECTRIC CURRENT

Current Flow	Human Body's Response
Less than 0.001 amp (1 milliamp)	– No sensation
0.001 to 0.002 amps (1 to 2 milliamps)	– Threshold of perception - very slight tingle
0.002 to 0.010 amps (2 to 10 milliamps)	– Muscular contraction - mild to strong
0.010 to 0.025 amps (10 to 25 milliamps)	– Painful shock - inability to let go due to strong muscular contractions
over 0.025 amps (25 milliamps), but less than 0.050 amps (50 milliamps)	– Violent muscular contraction
0.050 to 0.100 amps (50 to 100 milliamps)	– Ventricular fibrillation - irregular heart beat and pumping (can be fatal)
over 01.00 amps (100 milliamps)	– Paralysis of breathing (fatal)

Zipper Door Makes Access into Shrink-Wrapped RV Possible

Dr. Shrink's RV Access Door lets owners enter their units even when they're wrapped for storage. The door measures 40" x 82" and features a new C-shaped opening versus the traditional U shape. A double zipper enables unlimited use without compromising the integrity of the cover. Re-sealable and waterproof, it's easily installed with heat shrink tape. Contact Dr. Shrink at (800) 968-5147, email at drshrink@dr-shrink.com, or visit www.dr-shrink.com.

New Lippert Jack Named Magazine's Readers Choice

Lippert Components' new HappiJac 4800 Heavy-Duty Truck Camper Jack was named Truck Camper Magazine Reader's Choice for best truck camper gear of 2014. The jack was developed to accommodate double and triple slide truck campers and features nearly 50% more load capacity than the company's next strongest jack, with a 2,800-lb. load rating. It has three extra inches of length, yielding maximum clearance and improved lateral and structural support.

Trojan Intros New Battery

Reliant™ AGM, the industry's first true deep-cycle AGM battery, is now available from Trojan Battery Co. Manufactured in the U.S., it's engineered specifically for deep-cycling applications, unlike most AGM batteries on the market, and features sustained performance and increased energy output.

Connector Provides Single Link for Trailer Wiring

Practical and more aesthetically pleasing than a bunch of exposed electrical wires, Conntek's molded 7-way connector provides a fast, simplified way of connecting lines from a cord to the trailer wiring.

(continued on next page)

Its junction box is heavy plastic and includes hardware as well as four closed and four open rubber-fitted grommets, making it weatherproof and corrosion resistant. Its cord is 4 feet long.

Conntek's trailer power products provide power solutions for ABS or ISO equipped trailers. The company offers pin and pole configurations, ROJ cords, and junction boxes to wire in custom setups. These power products are built with water- and oil-resistant jackets that stand firm against conditions typically found on the road. They remain flexible even in the harshest weather conditions. Contact Conntek at (414) 482-0800 or visit www.conntek.com.

New Drop-In Hitch Designed For Dodge Ram Trucks

Cequent Performance Products announces the recent release of its Drop-In™ Fifth Wheel Hitch by Reese®. This custom 20K hitch, made specifically to fit the Ram 2500 HD and 3500 HD trucks with a factory installed OE rail system, features Cequent's Elite™ series fifth wheel head and built-in handles for safe, easy installation and removal.

The new hitch is rated for a 20,000-lb. capacity and a 5,000-lb. pin weight capacity. Its sleek, sturdy design features a 9-inch wide funnel for easier hook-up, single forged wrap-around jaw for a quieter ride, and a black powder coat finish.

Upgraded Tread Lite Power Step

Lippert Components' upgraded Tread Lite® Power Step extends and retracts faster and provides greater stability. The improved design is easy to install and is covered with anti-slip coating for premium skid resistance.

Built with lightweight aluminum step treads, the Tread Lite Power Step is significantly lighter than steel counterparts. It features obstruction-sensing technology that stops movement if any obstructions are encountered, and an LED light strip makes it easy to see the step at night.

The Tread Lite Power Step is made in the United States and is available in single, double, and triple step configurations.

Recalls

Note: For more information on these and all federal recalls, contact the National Highway Traffic Safety Administration's Vehicle Safety Hotline at 1-888-327-4236 (TTY 1-800-424-9153), or go to www.safercar.gov.

Winnebago: Pipe Fitting Crack

Winnebago Towable is recalling certain model year 2013-2015 Minnie 2201DS and 2450BHS travel trailers manufactured May 7, 2012, to November 13, 2014, and 2013-2015 Sunnybrook Remington 2200DS and 2451BHS travel trailers manufactured May 7, 2013, to November 13, 2014. The axle may contact the black liquid propane pipe fitting, resulting in the fitting cracking or breaking.

If the propane pipe fitting cracks or breaks, propane may leak, increasing the risk of a fire.

Winnebago Towable will notify owners. The remedy for this recall is still under development. Owners may contact Winnebago Towable customer service at 1-574-825-5250.

Lance: Awning Failure

Lance Camper Manufacturing Corp. is recalling certain model year 2015 slide in campers and travel trailers manufactured August 1, 2014, to October 27, 2014, and equipped with certain Latitude awnings manufactured by Carefree of Colorado. The mounting brackets of the affected awnings may crack, and the awnings may fall.

If an awning falls, it could injure anyone underneath. Lance will notify owners, and dealers will remove and replace all the mounting brackets. Owners may contact Lance customer service at 1-661-949-3322.

Thor: Awning Failure

Thor Motor Coach is recalling certain model year 2015 Challenger, Four Winds 5000, Hurricane, Miramar, Chateau Citation, Chateau, Windsport, and Palazzo motorhomes manufactured April 24, 2014, to December 11, 2014, and equipped with certain Latitude awnings manufactured by Carefree of Colorado. The affected awnings may have screws that attach the lateral arm brackets to the mounting brackets that were not manufactured to specification. The screws could fail, causing the supporting bracket to fail and the awning to fall and potentially strike and injure a person beneath it.

TMC will notify owners, and dealers will remove and replace the defective screws. Owners may contact TMC customer service at 1-877-500-1020.

Entegra: Awning Failure

Entegra Coach is recalling certain model year 2015 Aspire motorhomes

(continued on next page)

manufactured July 14, 2014, to October 29, 2014, and equipped with certain Latitude awnings manufactured by Carefree of Colorado. The affected awnings may have screws that attach the lateral arm brackets to the mounting brackets that were not manufactured to specification. The screws could fail, causing the supporting bracket to fail, and the awning to fall and potentially strike and injure a person beneath it.

Entegra will notify owners, and dealers will remove and replace the defective screws Owners may contact Entegra customer service at 1-800-945-4787.

Winnebago: Tire Sensors

Winnebago Industries Inc. is recalling certain model year 2014-2015 Winnebago Trend, Travato, and Itasca Viva motorhomes manufactured November 13, 2013, to December 23, 2014. In the affected vehicles, the tire pressure monitoring system (TPMS) may fail to learn the locations of the individual sensors while the vehicle is being driven. As a result, the low tire pressure warning light will illuminate, despite the tire pressures being within specification. If one of the tires lost air pressure, the driver would not be notified of the change in air pressure.
If the TPMS light illuminates because the sensors can't be located, it could mask an actual low tire pressure condition, possibly resulting in tire failure, increasing the risk of a crash.
Winnebago will have Chrysler notify owners, and dealers will update the TPMS module software. Owners may contact Winnebago customer service at 1-800-537-1885.

Fleetwood: Loose Grab Bar

Allied Recreational Group Inc. is recalling certain model year 2014-2015 Fleetwood Bounder Classic recreational vehicles manufactured April 10, 2013, to August 7, 2014. Due to insufficient structural reinforcement at the installation area, a grab bar can be pulled loose in the affected vehicles.

ARG will notify owners, and dealers will remove and reinstall the grab bar onto a reinforcement steel plate. Owners may contact ARG customer service at 1-800-509-3417.

Fleetwood: Seat Pedestal

ARG is recalling certain model year 2014-2015 Fleetwood Excursion vehicles manufactured July 16, 2013, to November 5, 2014, and 2015 Holiday Rambler Ambassador vehicles manufactured August 7, 2014, to October 23, 2014. On the affected vehicles, a seat pedestal mounting support bracket may not have been installed according to engineering specifications.

An incorrectly installed seat pedestal can cause the seat to detach from the floor, failing to restrain the occupant and increasing the risk of occupant injury in the event of a vehicle crash.

ARG will notify owners, and dealers will inspect and install new mounting bracket hardware if necessary. Owners may contact ARG customer service at 1-800-509-3417.

Certification How-To

It's time to take the first step toward certification!

The RV technician certification process is just a click away. Visit www.rvtechnician.com to learn more.

Step 1

Technician Certification Candidate: The candidate test is a basic orientation to the RV service technician career. The training and test is available at no cost and is located at: http://www.rvst.org/Candidate/.

Step 2

Registered Technician: This test establishes that the technician is proficient in core knowledge areas such as propane, basic electrical, fire & life safety, weight knowledge, and other technical skills.

Step 3

Select a Career Path

Traditional Certification: This test is designed to evaluate both the general and specific knowledge in 12 different areas--propane, electrical, plumbing, brakes, suspension, towing, appliances, generators, hydraulics, interior, exterior, slide out systems and other technical skills.

Specialty Certifications: There are five certified specialist areas that make up the right path on the RV Service Technician Career Ladder: body, chassis, electrical systems, appliances, and plumbing.
Each test focuses on the subject related to the specialty.

ONLINE TRAINING WITH FRVTA'S DISTANCE LEARNING NETWORK

The DLN offers your dealership:

- Onsite training
- Group training
- No travel time or expenses
- Self-determined pace
- One fixed price of $995 for the subscription term

The Florida RV Trade Association and RVDA's Mike Molino RV Learning Center partner to provide distance learning opportunities to RV dealers and their employees. The Distance Learning Network is $995 per year for each dealership location. Over 50 sessions available, 24 hours a day, seven days a week, with full access to training through July 31, 2015.

The DLN offers online training for:

- **RV Technicians** – The certification prep course helps technicians get ready for the certification exam. Your subscription includes unlimited access to more than 50 training sessions, reviews, and test preparation sections. Also included are manufacturer- and supplier-specific advanced repair and troubleshooting classes designed to upgrade technicians' skills. Completion of these classes qualifies for recertification hours. Classes are available 24/7 throughout the program year, providing maximum flexibility.

- **Service Writers/Advisors** – This three-hour program is valuable for both new staff and experienced personnel preparing for the RV Learning Center's Service Writer/Advisor certification.

- **Greeters/Receptionists** – This 50-minute session is suitable for all employees who need customer service skills. It includes a final exam and certificate of completion.

- **Dealers/GMs** – This program features important topics for management, including lemon laws, LP gas licensing issues, and the federal Red Flags Rule.

DEALERSHIP REGISTRATION

Company Name: _____

Address: _____ City: _____ State: _____ Zip: _____

Phone: _____ Fax: _____

Mentor Name: _____ Phone: _____

E-mail *(at dealership)*: _____ Fax: _____

*****High speed Internet access required. RVIA service textbooks not included*****

_____ location(s) at **$995 each** = payment due: $_____ *(select payment method below)*

PAYMENT METHOD *Note: prices are subject to change without notice. Complete lower section and mail or fax to:*
Florida RV Trade Association, 10510 Gibsonton Drive, Riverview, FL 33578, (813) 741-0488, Fax: (813) 741-0688

❑ PAY BY CHECK OR MONEY ORDER ❑ PAY BY VISA OR MASTERCARD

Name on Credit Card: _____ Card Number: _____

Security Code: _____ Expires: _____ Card Billing Address: _____

Card Holder Signature: _____

For more information, call (386) 754-4285 or go to https://www.fgc.edu/academics/occupational-programs/rv-institute/ *8/2014*

RV TECH CERT PREP COURSES

Every technician can have access to individual self-study training and certification preparation for all sections on the career ladder.

Just getting started?

Take the **FREE** online **Candidate test** by clicking on **"How to Become Certified"** at www.rvtechnician.com

REGISTERED TECHNICIAN

Course A. $89

The **Registered Technician Course** prepares RV Service Technician Candidates to take the **Registered RV Service Technician** test. *

Already a Registered Technician?

Choose Your Path:

CERTIFIED TECHNICIAN PREP COURSE

Course B. $249

Comprehensive Certification Preparation Course that represents the left side of the RV Service Technician Career Ladder. This course is preparation for testing as a **Certified Technician. ***

CERTIFIED SPECIALIST PREP COURSE

Course C. $69/specialty

Prepares a technician to be tested and certified* in five areas of specialty:

C1. Appliances **$69**
C2. Body **$69**
C3. Chassis **$69**
C4. Electrical Systems **$69**
C5. Plumbing **$69**

ALL COURSES USE AN INTERACTIVE MULTIMEDIA ONLINE FORMAT. Combines text, graphics, and video with mentor support. All content is online. No extra materials needed. Courses align with core knowledge areas of certification tests.*

Each fee offers access to the specific online **preparation course and DOES NOT cover **certification testing**.*

YES, I WANT TO REGISTER MY TECHNICIANS! (Copy this form to register more than four.)

Company _____

Address _____

City/State/Zip _____

Phone _____ FAX _____

Developed by RVIA and available through the Mike Molino RV Learning Center.

Each technician MUST have a *distinct* email address that only they can access.

Indicate which COURSE a technician is choosing with A, B, or C. If choosing C, indicate chosen specialties by number.

Name _____ Email _____ Course_____ $ _____*

Name _____ Email _____ Course_____ $ _____*

Name _____ Email _____ Course_____ $ _____*

Name _____ Email _____ Course_____ $ _____*

Send progress reports and other notifications to the following supervisor: **TOTAL $ _____***

Name _____ Title _____ Email _____

Method of Payment All registrations must be pre-paid in U.S. funds. Fees subject to change without notice.

__ **Check enclosed:** Payable to the Mike Molino RV Learning Center **Credit Card** __ VISA __ MC __ AMEX __ DISCOVER

Cardholder Name _____ Billing Address _____

Acct # _____ Exp _____ Security Code _____

Cardholder Signature _____

Fax to (703) 359-0152 or mail to the Mike Molino RV Learning Center, 3930 University Dr., Fairfax, VA 22030.
Call (703) 591-7130 to enroll by phone.

Form Created Oct. 2014

The Mike Molino RV Learning Center
Developing Top Performers

RV Service Textbooks

SUMMARIES & ORDER FORM

Published by RVIA, Available through The RV Learning Center

These RV textbooks help technicians increase their knowledge and understanding of the various RV components and operating systems found in today's RVs, and also prepares them for the new testing requirements of the RV Service Technician Career Ladder. The complete set consists of 14 volumes --written by RV service experts, and the Electricity Demystified text.

SAVE 30% WHEN YOU ORDER A COMPLETE HARD COPY OR CD-ROM SET!

See next page for details!

Textbook Title	Price	# books	Total $
Introduction to RV Service – Provides an introduction to the RV industry, the various types of RVs and their structural characteristics and systems, the basic tools utilized by RV technicians, and safety in the RV workplace. Summaries of industry codes and standards and RV technician job classifications are also included as well as basic information on using RV service manuals. Developing and demonstrating solid customer relations and record keeping skills are also addressed.	$19.95		
Electricity Demystified – Written in a step-by-step format, this practical guide begins by covering direct current (DC), voltage, resistance, circuits, cells, and batteries. The book goes on to discuss alternating current (AC), power supplies, wire, and cable. Magnetism and electromagnetic effects are also addressed. Detailed examples and concise explanations make it easy to understand the material.	$14.95		
RV Electrical Systems – Provides instruction on performing AC and DC voltage systems inspections and tests; servicing AC and DC power sources; servicing wiring/distribution systems; and maintaining, repairing and inspecting AC and DC devices.	$49.95		
RV Propane Systems – Provides instruction on inspecting and maintaining propane containers and fittings; inspecting and maintaining the piping system; performing propane system tests; purging and filling containers; transferring propane from container to container; and burning off propane in a container.	$49.95		
RV Generators – Covers the installation, maintenance and repair of RV generators, the generator section and control system. This includes inspecting, maintaining and repairing generator components and verifying battery voltage, fuel source and pressures, engine operation, output voltage and frequency, and governor operation.	$39.95		
RV Ranges & Cooktops – Provides instruction on the installation, repair and replacement of ranges and ovens. This includes verifying gas pressure; verifying grate clips installation; checking lines and fittings; repairing and replacing components; verifying range burners are not affected by operation of force air furnace or other appliances; and performing function test.	$39.95		
RV Water Heaters – Covers the installation, repair and replacement of RV water heaters — Pilot, DSI (direct spark ignition) and Electric. Topics addressed include inspecting ignition systems, verifying gas pressure; troubleshooting the sequence of operation, repair and replacement of various components; draining and flushing the water heater and inspecting fittings for calcium deposits; checking fittings on the tank; inspecting and replacing the water tank; and checking lines and valves for motor aide.	$39.95		
RV Plumbing Systems – Provides instruction on performing fresh water systems tests; inspecting and repairing fresh water storage tanks, distribution systems, and fixtures and devices; performing waste water systems tests; and inspecting, repairing and replacing waste holding tanks and drainage piping systems.	$39.95		
RV Heating Appliances – Covers installation, repair and replacement of RV heating systems, including gravity, pilot and DSI (direct spark ignition furnaces). Topics examined include verifying pressure and electrical voltage; inspecting and cleaning burner, pilot, exhaust tube and air intake; troubleshooting the sequence of operation; repairing and replacing various furnace components; inspecting and correcting ducting and return air.	$39.95		

RV Service Textbooks

RV Refrigerators – Provides instruction on the installation, repair and replacement of absorption refrigerators (manual and automatic selection). This includes verifying proper venting, AC and DC power sources, propane gas pressure, and leveling; diagnosing and replacing electric and gas components; diagnosing and replacing the cooling unit; diagnosing, repairing and replacing the internal ice maker components; and performing function tests.	$39.95		
RV Air Conditioning – Covers the installation, repair and replacement of air conditioning and heat pump units, including verifying air flow, assessing the integrity of the electrical system, and evaluating the integrity of refrigerant systems.	$39.95		
RV Pre-Delivery Inspection – Introduces and explains the many important steps in inspecting the RV before delivering to the customer, including checking propane systems, pre-testing all appliances and accessories, testing and inspecting the AC and DC electrical system; checking safety items, lighting, window roof molding seals, and wiper blades; checking and lubing doors; visually inspecting chassis; checking lug nuts and tire pressure; testing water supply and drainage systems; and conducting a test drive.	$39.95		
RV Preventive Maintenance – Examines what services to perform for preventative maintenance, including checking propane systems; servicing and adjusting appliances; testing G.F.C.Is; winterizing and de-winterizing coach; checking safety items; checking and lubricating doors; checking exterior lights; checking window roof molding seals; changing oil and filter on power plants; checking wiper blades; visually inspecting fluid levels; servicing batteries; inspecting belts and hoses; changing chassis oil and filter and lubricating chassis; changing transmission oil, filter and gasket; visually inspecting chassis; checking lug nuts and tire pressure; flushing and refilling cooling system; and performing a test drive.	$39.95		
RV Brakes, Suspension & Towing – Covers the basics of brakes and brake controllers used in RV towable systems. References RV suspension systems as well as wheels and tires. Fully describes types of RV towing systems, hitches, wiring, and accessories. Includes information on troubleshooting, repair and replacement of stabilizer jacks and mechanical landing gear jacks. Textbook also covers vehicle weights, weight safety, weight labels, legal regulations, codes and standards.	$39.95		
RV Hydraulics – Covers the basic principles and laws of hydraulics, hydraulic terminology, special tools and equipment and basic hydraulic circuits. The book introduces the technician to hydraulic system components and their functions. Includes information on performing hydraulic system maintenance, safety, and troubleshooting procedures.	$39.95		
Save almost $200 – Complete Book Set	**$382.00**		
TOTAL COST OF TEXTBOOKS IF PURCHASED INDIVIDUALLY	**$574.25**		
ALSO AVAILABLE ON CD-ROM (NOTE: Electricity Demystified is NOT on the CD-ROM, but will be included in hard copy format with your order.)	**$382.00**		
Price includes shipping and handling. **Total Amount Enclosed: $**			

Name: _____ **Company:** _____

Shipping Address: _____

City: _____ **State:** _____ **Zip:** _____

Phone: _____ **Fax:** _____

Method of Payment (Please Check One):

❑ Check (Made Payable to the Mike Molino RV Learning Center

❑ Send an Invoice (RVDA Members Only)

❑ Credit Card: ❑ Visa ❑ MasterCard ❑ Amex ❑ Discover

Mail this form to Mike Molino RV Learning Center or fax to (703) 359-0152.

For more information call (703) 591-7130 or visit our website at www.rvlearningcenter.com

Card No.: _____ **Expiration Date:** _____

Name on Card _____

Signature: _____

Billing Address (if different from above): _____

The Mike Molino RV Learning Center proudly recognizes these

CONTRIBUTORS

*Active donors are those who have contributed to the RV Learning Center during the past two years.

The Mike Molino RV Learning Center 2015 Annual Campaign®

Received From	Contributed 02/04/13 - 02/23/15*	Total Lifetime Pledge	Last Contribution	Received From	Contributed 02/04/13 - 02/23/15*	Total Lifetime Pledge	Last Contribution
MAJOR GIFTS active donors* with cumulative donation or pledge of $25,000 or more							
Newmar Corporation	$50,000	$260,000	01/16/15	McClain's RV Superstore	$6,000	$42,000	06/30/14
Coach-Net	$5,000	$204,917	01/26/15	Pan Pacific RV Centers, Inc.	$2,000	$41,500	10/20/14
Protective	$62,358	$194,916	01/07/15	RVAC	$7,000	$38,000	12/20/13
RVDA of Canada	$25,000	$175,000	12/18/13	Reines RV Center, Inc.	$6,500	$31,525	12/31/14
Bank of America Merrill Lynch	$5,000	$173,000	04/29/13	Diversified Insurance Mgmt. Inc.	$6,600	$31,200	12/23/14
Tom Stinnett Derby City RV	$1,000	$102,500	12/12/14	Pikes Peak Traveland	$1,200	$31,200	11/21/14
PleasureLand RV Center, Inc.	$14,500	$96,850	01/05/15	Bill Thomas Camper Sales, Inc.	$5,000	$31,000	03/12/14
Horsey Family Memorial Fund	$2,000	$70,000	06/26/14	Paul Evert's RV Country, Inc.	$2,000	$30,000	06/24/14
Bill & Kristin Fenech	$10,000	$62,500	09/24/14	Tiffin Motor Homes, Inc.	$5,000	$28,500	03/24/14
Campers Inn	$16,000	$61,000	12/15/14	Avalon RV Center	$1,000	$26,500	04/12/13
Ron & Lisa Fenech	$10,000	$60,000	10/08/14	Holiday World of Houston	$1,000	$26,000	06/17/14
Byerly RV Center	$6,000	$52,000	01/10/14	Bill Plemmons RV World	$5,000	$25,000	06/13/14
Fogdall Family Fund	$6,000	$43,100	03/05/14				
CHAMPIONS active donors* with a cumulative donation or pledge between $2,500 and $24,999							
Jayco	$5,000	$23,500	12/08/14	Burlington RV Superstore	$1250	$6,250	12/09/14
Dixie RV Superstore	$5,000	$20,000	03/21/14	Madison RV Supercenter	$1,000	$5,500	09/02/14
Earl Stoltzfus	$10,000	$20,000	08/30/13	Camperland of Oklahoma, LLC	$1,000	$5,350	06/26/14
Greeneway, Inc. (Rte 66 Dealer)	$1,550	$19,850	12/22/14	Webster City RV, Inc.	$2,000	$5,100	05/05/14
Wilkins R.V., Inc.	$3,000	$19,600	06/26/14	Don Clark	$5,000	$5,000	10/24/14
Alpin Haus	$1,500	$18,500	06/24/14	Don Gunden	$5,000	$5,000	12/31/14
Rivers RV	$250	$17, 600	05/31/13	Bob and Amy Martin	$5,000	$5,000	12/16/14
Hartville RV Center, Inc.	$2,250	$15,750	06/10/14	Crestview RV Center	$3,000	$4,500	01/09/15
MBA Insurance, Inc.	$1,000	$15,100	05/17/13	Topper's Camping Center.	$1,250	$4,250	11/25/14
AIRXCEL RV Group	$2,500	$13,000	10/27/14	Best Value RV Sales & Service	$2,000	$3,750	05/12/14
Mike and Barb Molino	$275	$11,586	01/24/14	Phil Ingrassia	$2,500	$3,500	12/29/14
Little Dealer, Little Prices	$1,000	$11,050	12/11/14	Myers RV Center, Inc.	$500	$3,500	06/25/14
Affinity RV Service Sales & Rentals	$2,000	$11,000	06/24/14	J. D. Sanders, Inc.	$500	$3,250	07/28/14
United States Warranty Corp.	$2,000	$10,250	04/30/14	RCD Sales Company, Ltd.	$1,000	$3,250	08/11/14
Great Lakes RV Association	$10,000	$10,000	02/28/13	United RV	$100	$3,100	11/25/14
Rich & Sons Camper Sales	$2,000	$10,000	11/14/13	A World of Training	$3,000	$3,000	11/20/13
Folsom Lake RV Center	$2,700	$9,700	12/16/13	All Valley RV Center	$1,000	$3,000	11/10/14
Motley RV Repair	$1,000	$9,075	09/13/13	Route 66 RV Network	$1,000	$3,000	01/12/15
Curtis Trailers	$1,250	$8,250	06/30/14	RV Outlet Mall	$250	$2,550	06/05/13
Circle K RV's, Inc.	$750	$6,750	08/22/14	Alliance Coach, Inc.	$500	$2,500	04/11/14
Hayes RV Center	$1,250	$6,650	12/15/14	Onsite Temp Housing	$500	$2,500	05/08/14
LEADERS active donors* with a cumulative donation or pledge between $1,000 and $2,499							
The Trail Center	$600	$2,450	11/21/14	Schaap's RV Traveland	$1,000	$1,350	12/19/14
Hilltop Trailer Sales	$500	$2,122	06/11/13	Candys Campers	$250	$1,300	08/12/14
Noble RV, Inc.	$1,005	$1,905	11/20/14	Camp-Site RV	$500	$1,000	01/20/15
Northern Wholesale Supply, Inc.	$1,000	$1,750	12/12/14	Bill Mirrielees	$500	$1,000	04/30/14
Steinbring Motorcoach	$500	$1,750	12/03/14	Tom Manning & Associates	$1,000	$1,000	07/11/14
Dinosaur Electronics	$900	$1,650	06/18/14	NERVDA	$1,000	$1,000	11/23/14
Out of Doors Mart, Inc.	$750	$1,500	11/03/14	Prime Time Manufacturing	$1,000	$1,000	12/30/14
Skyline RV & Home Sales, Inc.	$750	$1,500	07/14/14				
BENEFACTORS active donors* with a cumulative donation or pledge between $500 and $999							
Beckley's Camping Center	$500	$750	06/17/14	Niel's Motor Homes	$250	$500	06/11/14
Bell Camper Sales	$300	$550	09/09/14	Ocean Grove Supercenter	$500	$500	06/04/14
American Guardian Warranty	$500	$500	02/01/15	Tennessee RV Sales & Service, LLC	$500	$500	11/25/14
Holiday Hour, Inc.	$200	$500	03/24/14				
SUPPORTERS active donors* with a cumulative donation or pledge between $100 and $499							
Modern Trailer Sales, Inc.	$250	$250	06/04/14	Keepers RV Center	$100	$100	12/10/14
Southaven RV Center	$250	$250	05/12/14	Mike Thompson's RV Super Stores	$100	$100	08/12/13
C.S.R.A. Camperland	$200	$200	12/12/14	Northwest RV Sales	$100	$100	08/04/14
Happy Camping RV	$100	$200	11/07/13	RV Share	$100	$100	12/31/14
Black Book RV Value Guide	$100	$100	10/24/14	Setzer's World of Camping, Inc.	$100	$100	02/21/14
John Peak	$100	$100	10/03/13	Starr's Trailer Sales	$100	$100	11/25/14
ENDOWMENTS							
Kindlund Family Scholarship		$270,000					

We offer more than products. We offer solutions.

RVDA

SINCE1991

When you work with Protective you offer customers more than products; you offer solutions – solutions that allow people to embrace all today has to offer by protecting their tomorrow.

Protective provides F&I solutions that simplify the selling process with easy to understand products, advanced training and relable customer care and claims service. We are committed to your profitability by serving the increasing number of RV buyers that are unprotected from the costs of future mechanical expenses.

Like you, we believe in doing the right thing for the customer. Help your customers protect tomorrow and embrace today with F&I solutions from Protective Asset Protection.

Learn more at protectiveassetprotection.com/brand

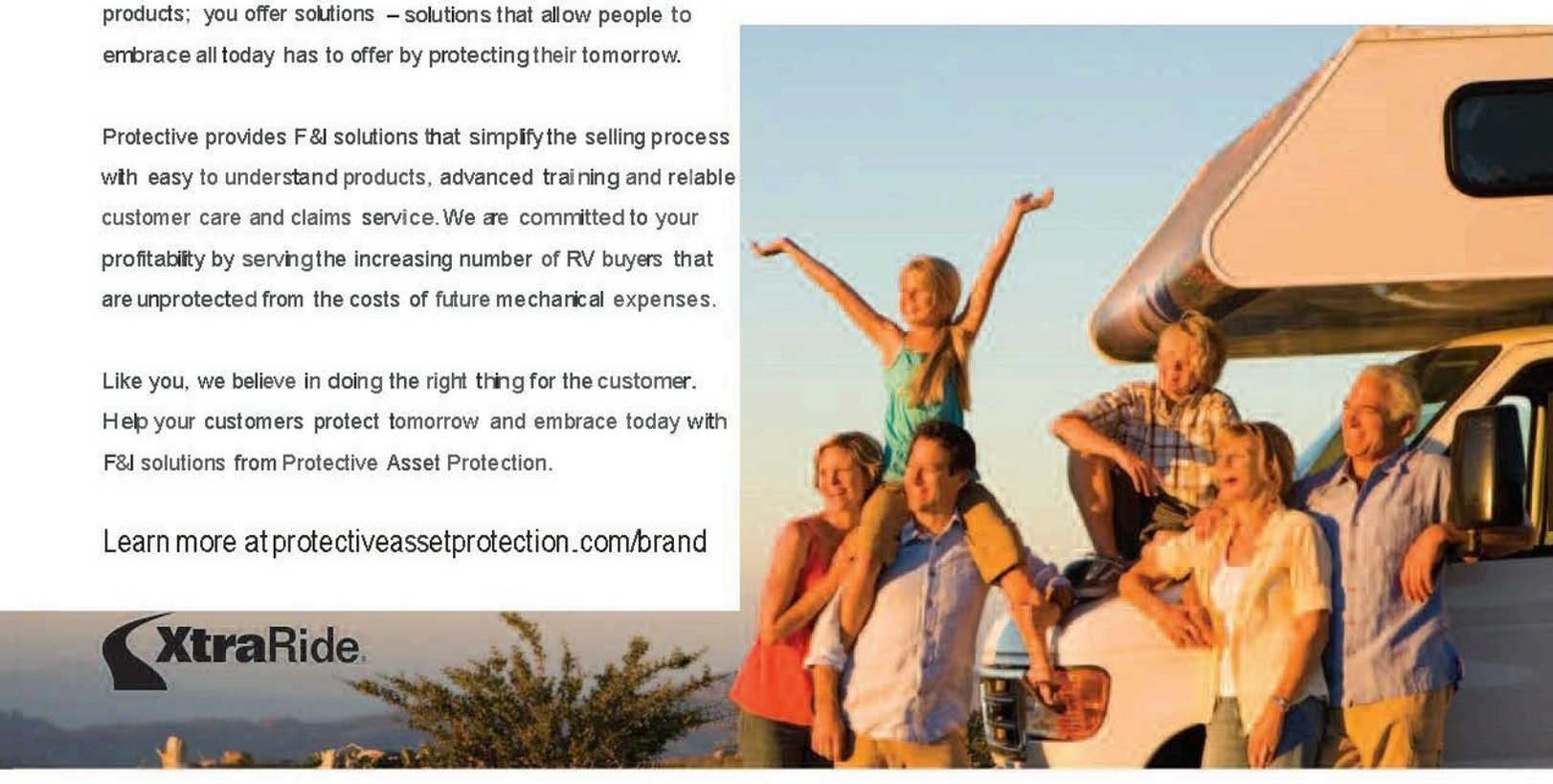

Protect Tomorrow. Embrace Today.™

XtraRide Service Agreements | Post-Sale Programs
Dealer Experience Refund & Reinsurance Programs | Rental Programs
F&I Training | On-Line Rating, Reporting & Agreements
888 274 5104

Protective
Asset Protection

The XtraRide Service Agreement Program backed by Lyndon Property Insurance Company, a Protcompany in all states except New York In New York i5 products [illegible] by Old R [illegible] Insurance Company. An RVDA endorsed profit [illegible]